USE AND MAINTENANCE MANUAL

LIGHTING KIT

TF NM9 A-6X1500

- Torri Faro
- Lighting Towers
- Tours D'éclairage
- Torres de iluminación
- Lichtmasten

Codice Code Codigo Kodezahl	5A9409003
Edizione Edition Edición Ausgabe	12.2014

MADE IN ITALY

MOSALight

The lighting towers TF NM 9 are mobile units for lighting designed to ensure maximum reliability of operation in all areas even in the heaviest (building sites, ports, airports, etc. ..).
The lighting tower is composed mainly of:
- a frame or base on which the generating set is fixed
- 4 outriggers adjustable in height, 2 of which are extensible, to ensure the stability of the tower on any operation surface.
- a single axle site tow with wheels and fenders, complete of jack adjustable in height
- a hydraulic telescopic mast, which can be raised up to a maximum height of 9 meters and manually oriented within a range of 340°
- a floodlights assembly that can be composed of 4 or 6 floodlights with lamps of different types and power : metal halide, LED, halogen
- A command and control panel for a simple and safe use of the lighting tower. The control panel is lockable and complete with power cable.

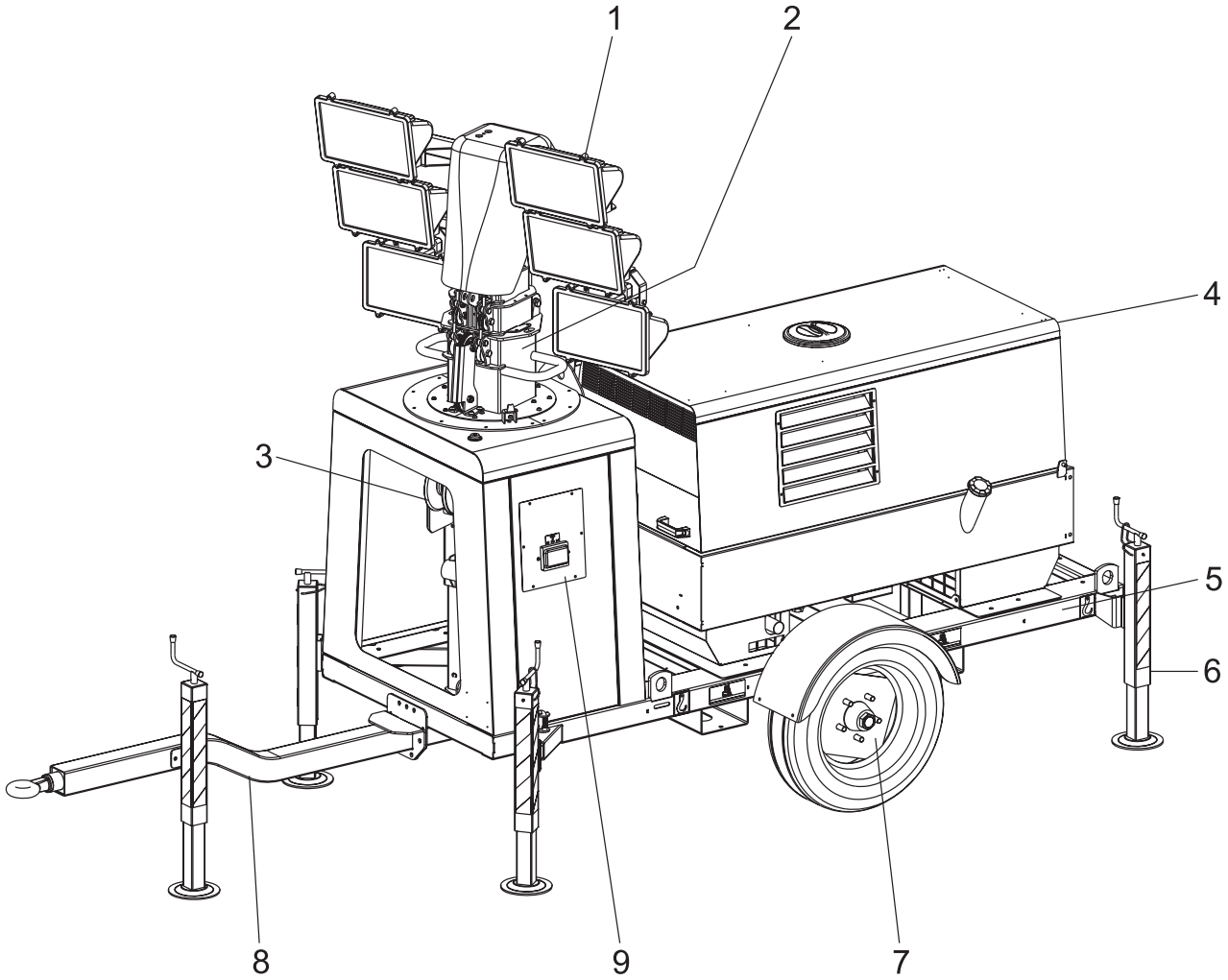

1- Floodlights assembly
2- Hydraulic telescopic mast
3- Winch
4- Generating set
5- Base (Frame)
6- Outriggers
7- Site tow wheels
8- Site tow drawbar
9- Command and control panel

M 0 DESCRIPTION OF THE MACHINE
M 1.1 NOTES
M 1.4 CE MARKING
M 1.5 TECHNICAL DATA
M 2 SYMBOLS AND SAFETY PRECAUTIONS
M 2.5 … SAFETY RULES
M 2.7.1 ... DIMENSIONS
M 4.2 TRANSPORT AND HANDLING
M 23 PRELIMINARY CHECKS AND POSITIONING OF THE LIGHTING TOWER
M 23.1 FLOODLIGHTS ORIENTATION AND MAST RAISING/LOWERING
M 31 CONTROLS
M 43.3 ... MAINTENANCE OF THE LIGHTING TOWER
M 45 STORAGE / CUST OFF
M 60 ELECTRICAL SYSTEM LEGEND
M 61-….. ELECTRICAL SYSTEM

INFORMATION

Dear Customer
We wish to thank you for having bought a high quality product.

Our sections for Technical Service and Spare Parts will work at best to help you if it were necessary.

To this purpose we advise you, for all control and overhaul operations, to turn to the nearest authorized Service Centre, where you will obtain a prompt and specialized intervention.

☞ In case you do not profit on these Services and some arts are replaced, please ask and be sure that are used exclusively original parts; this to guarantee that the performances and the initial safety prescribed by the norms in force are re-established.

☞ *The use of **non original spare parts will cancel immediately** any guarantee and Technical Service obligation.*

NOTES ABOUT THE MANUAL
Before actioning the machine please read this manual attentively. Follow the instructions contained in it, in this way you will avoid inconveniences due to negligence, mistakes or incorrect maintenance. The manual is for qualified personnel, who knows the rules: about safety and health, installation and use of sets movable as well as fixed.

You must remember that, in case you have difficulties for use or installation or others, our Technical Service is always at your disposal for explanations or interventions.

The manual for Use Maintenance and Spare Parts is an integrant part of the product. It must be kept with care during all the life of the product.
In case the machine and/or the set should be yielded to another user, this manual must also given to him.
Do not damage it, do not take parts away, do not tear pages and keep it in places protected from dampness and heat.

You must take into account that some figures contained in it want only to identify the described parts and therefore might not correspond to the machine in your possession.

GENERAL INFORMATION

ANY USE OF THIS PRODUCT OTHER THAN THOSE EXPLICITELY INDICATED IN THIS MANUAL RELIEVE THE MANUFACTURER FROM ANY RESPONSIBILITY ABOUT DAMAGES THAT MAY OCCUR TO PERSONS, OR PROPERTY.

☞ ***Notice:*** *this manual does not engage the manufacturer, who keeps the faculty, apart the essential characteristics of the model here described and illustrated, to bring betterments and modifications to parts and accessories, without putting this manual uptodate immediately.*

Any of our product is labelled with CE marking attesting its conformity to appliable directives and also the fulfillment of safety requirements of the product itself; the list of these directives is part of the declaration of conformity included in any machine standard equipment.

Here below the adopted symbol:

CE marking is clearly readable and unerasable and it is part of the data-plate.

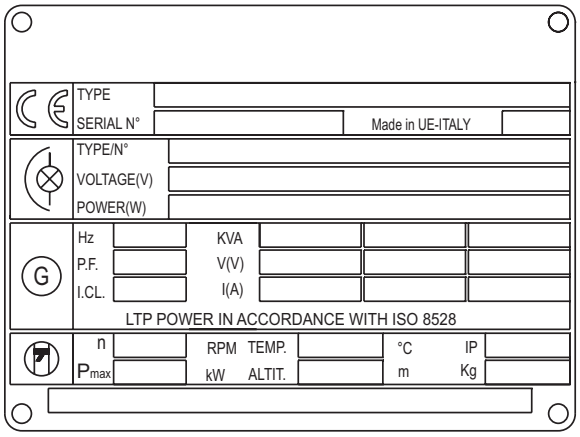

Technical data		TF NM 9 J-4x1000	
LIGHTS AND MAST	Lamp type	4 x1000 W – METAL HALIDE	
	Mast rotation	340° - MANUAL	
	Mast	TELESCOPIC – 9 m – MANUAL	
GENERAL CHARACTERISTICS	Wind load stability	UP TO 80 Km/h (*)	
	IP protection	IP 55	
	Stabilizers	4 ADJUSTABLE	
	Dimensions (l x w x h)	Closed tower and drawbar Open tower and drawbar	3920 x 1410 x 2240 3920 x 1975 x 9000
	Weight (dry)	excluding the generator	790 kg

(*) applicable to trailer loaded with generator having weight ≥ 210 kg

ILLUMINATION DIAGRAM

Type and n° of lamps	Power	Flux (each lamp)	Temperature	Lamps model	Mounting height
Metal halide N° 4	1000 W	85000 lm	7250 K	Osram HQI-T 1000 W/D	9 m

ISOLUX DIAGRAMS– ILLUMINATED AREA 4200 mq - 21 LUX

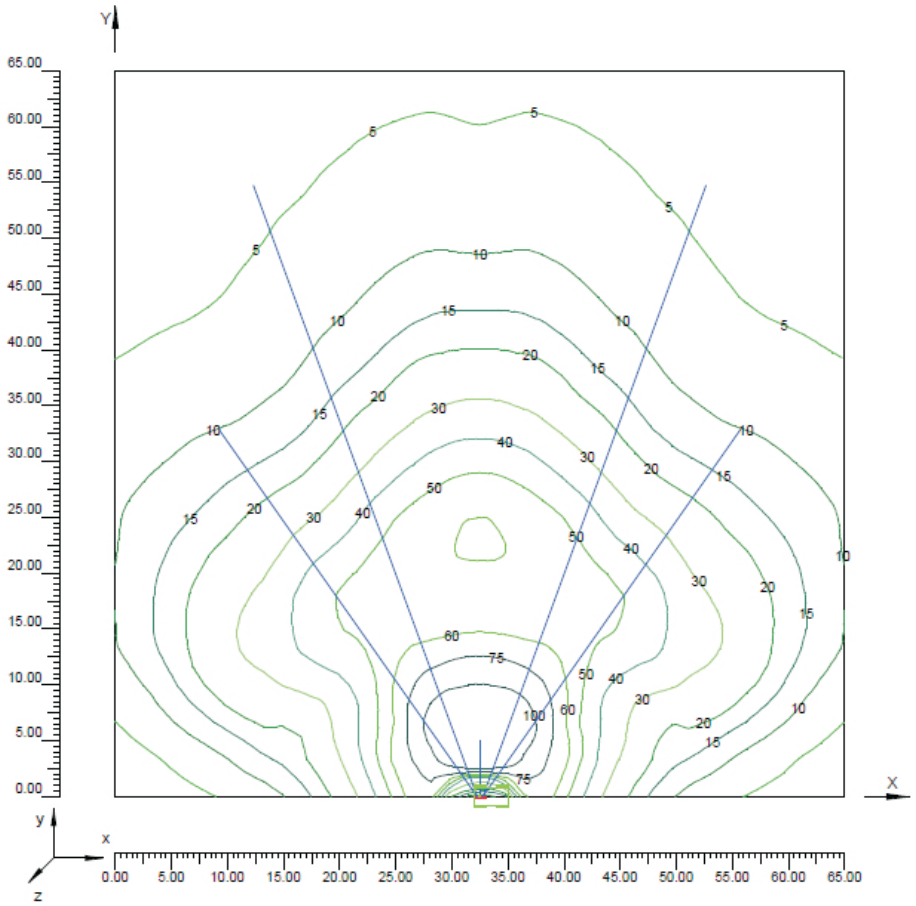

Technical data		TF NM 9 L-4x250	
LIGHTS AND MAST	Lamp type	4 x250 W – LED	
	Mast rotation	340° - MANUAL	
	Mast	TELESCOPIC – 9 m – MANUAL	
GENERAL CHARACTERISTICS	Wind load stability	UP TO 80 Km/h (*)	
	IP protection	IP 55	
	Stabilizers	4 ADJUSTABLE	
	Dimensions (l x w x h)	Closed tower and drawbar Open tower and drawbar	3920 x 1410 x 2240 3920 x 1975 x 9000
	Weight (dry)	excluding the generator	790 kg

(*) applicable to trailer loaded with generator having weight ≥ 210 kg

ILLUMINATION DIAGRAM

Type and n° of lamps	Power	Flux (each lamp)	Temperature	Lamps model	Mounting height
Led N° 4	250 W	25230 lm	5700 K	----	9 m

ISOLUX DIAGRAMS– ILLUMINATED AREA 4200 mq - 21 LUX AVERAGE

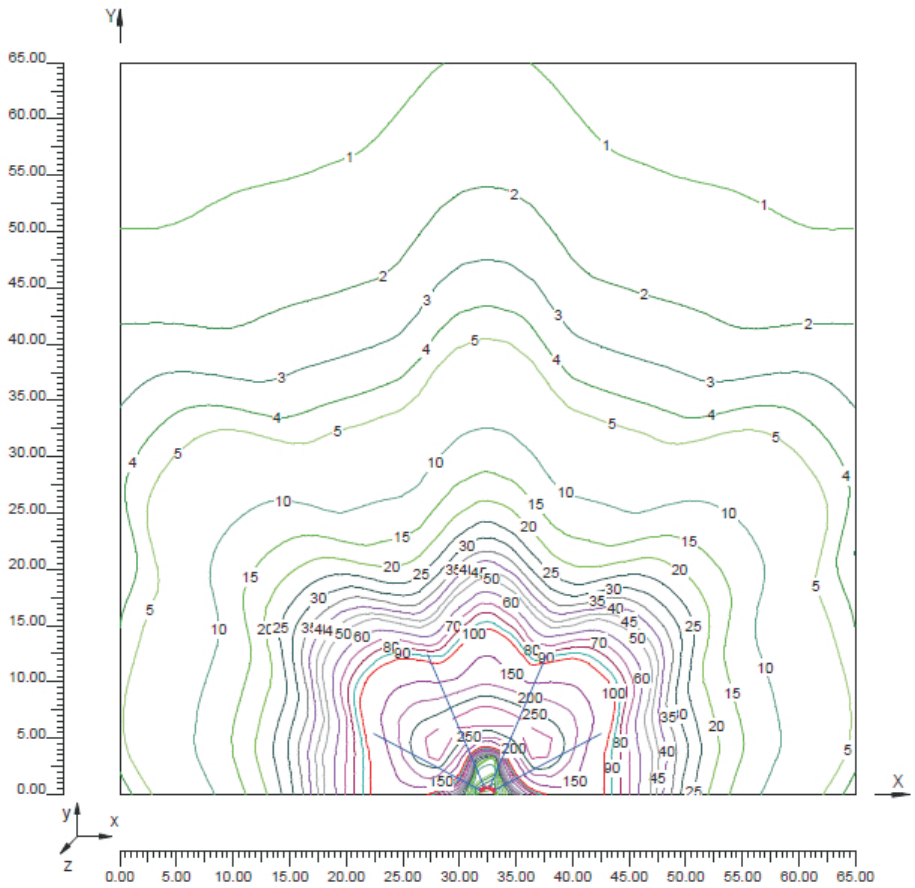

Technical data		TF NM 9 A-6x1500	
LIGHTS AND MAST	Lamp type	6 x1500 W – HALOGEN	
	Mast rotation	340° - MANUAL	
	Mast	TELESCOPIC – 9 m – MANUAL	
GENERAL CHARACTERISTICS	Wind load stability	UP TO 80 Km/h (*)	
	IP protection	IP 55	
	Stabilizers	4 ADJUSTABLE	
	Dimensions (l x w x h)	Closed tower and drawbar Open tower and drawbar	3920 x 1410 x 2240 3920 x 1975 x 9000
	Weight (dry)	excluding the generator	790 kg

(*) applicable to trailer loaded with generator having weight ≥ 210 kg

ILLUMINATION DIAGRAM

Type and n° of lamps	Power	Flux (each lamp)	Temperature	Lamps model	Mounting height
HALOGEN N° 6	1500 W	36000 lm	3000 K	HD 1500	9 m

ISOLUX DIAGRAMS– ILLUMINATED AREA 4200 mq - 15 LUX AVERAGE

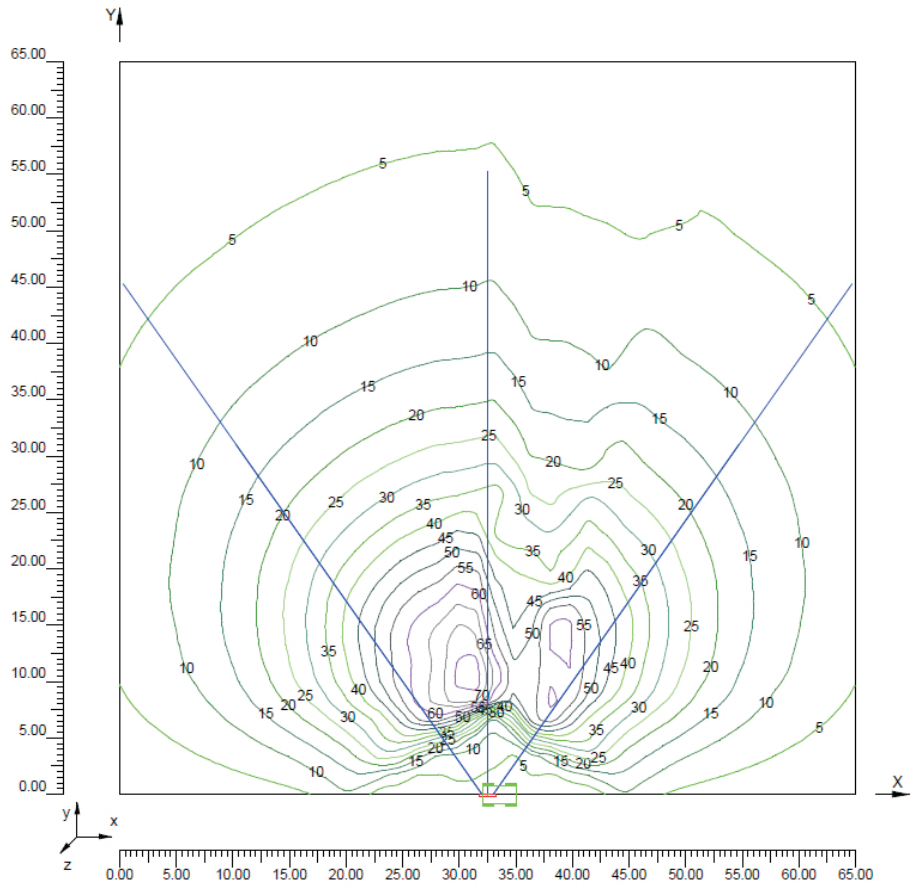

SYMBOLS IN THIS MANUAL

- The symbols used in this manual are designed to call your attention to important aspects of the operation of the machine as well as potential hazards and dangers for persons and things.
  Moreover, this symbolism intends to draw your attention with the aim to give you indications for a correct use and, as a result, to obtain a good operation of the machine or equipment used.

SAFETY PRECAUTIONS

DANGEROUS

This heading warns of an immediate danger for persons as well for things. Not following the advice can result in serious injury or death.

WARNING

This heading warns of situations which could result in injury for persons or damage to things.

CAUTION

To this advice can appear a danger for persons as well as for things, for which can appear situations bringing material damage to things.

IMPORTANT

NOTE

ATTENTION

These headings refer to information which will assis you in the correct use of the machine and/or accessories.

SYMBOLS

STOP **-** Read absolutely and be duly attentive.

Read and pay due attention.

DANGER

GENERIC DANGER **-** If the advice is not respected damage can happen to persons or things.

HIGH VOLTAGE **-** Attention High Voltage. There can be parts in voltage, dangerous to touch. The non observance of the advice implies life danger.

FIRE **-** Danger of flame or fire. If the advice is not respected fires can happen.

HEAT **-** Hot surfaces. If the advice is not respected burns or damage to things can be caused.

EXPLOSION **-** Explosive material or danger of explosion. in general. If the advice is not respected there can be explosions.

ACIDS **-** Danger of corrosion. If the advice is not respected the acids can cause corrosions with damage to persons or things.

PRESSION **-** Danger of burns caused by the expulsion of hot liquids under pressure.

PROHIBITIONS

It is prohibited to smoke while filling the tank with fuel.

The cigarette can cause fire or explosion. If the advice is not respected fires or explosions can be caused.

It is prohibited to use water to quench fires on the electric machines.

If the advice is not respected fires or damage to persons can be caused.

Use only with non inserted voltage

It is prohibited to make interventions before having disinserted the voltage.

ACCES FORBIDDEN *to non authorized* peaple

OBLIGATIONS

Use only with safety clothing

It is compulsory to use the personal protection means given in equipment.

It is compulsory to use tools adapted to the various maintenance works
If the advice is not respected damage can be caused to things and even to persons.

☞ **FIRST AID.** In case the operator shold be sprayed by accident, from corrosive liquids a/o hot toxic gas or whatever event which may cause serious injuries or death, predispose the first aid in accordance with the ruling labour accident standards or of local instructions.

Skin contact	Wash with water and soap
Eyes contact	Irrigate with plenty of water, if the irritation persists contact a specialist
Ingestion	Do not induce vomit as to avoid the intake of vomit into the lungs, send for a doctor
Suction of liquids from lungs	If you suppose that vomit has entered the lungs (as in case of spontaneous vomit) take the subject to the hospital with the utmost urgency
Inhalation	In case of exposure to high concentration of vapours take immediately to a non polluted zone the person involved

☞ **FIRE PREVENTION.** In case the working zone,for whatsoever cause goes on fire with flames liable to cause severe wounds or death, follow the first aid as described by the ruling norms or local ones.

EXTINCTION MEANS	
Appropriated	Carbonate anhydride (or carbon dioxyde) powder, foam, nebulized water
Not to be used	Avoid the use of water jets
Other indications	Cover eventual shedding not on fire with foam or sand, use water jets to cool off the surfaces close to the fire
Particular protection	Wear an autorespiratory mask when heavy smoke is present
Useful warnings	Avoid, by appropriate means to have oil sprays over metallic hot surfaces or over electric contacts (switches,plugs,etc.). In case of oil sprinkling from pressure circuits, keep in mind that the inflamability point is very low.

⚠ ATTENTION

The lighting towers is designed to be used with a generating set or with a fixed mass on its base. The weight and positioning of the generating set on the base are essential for the safety of the lighting tower. Failure to comply with this provision causes a serious danger of tipping or instability during operation and during handling with site tow If necessary, contact the service.

GENERAL SAFETY INSTRUCTIONS

☞ **NOTE:** the information contained in this manual are subject to change without notice.

The instructions in this manual are intended as indicative only. It is the responsibility of the owner/operator to evaluate risks and potential damages in relation to the use of the product in the specific conditions of application.

Remember that the non observance of the indications of this manual may result in damage to people or things.

In all cases, however, it is understood that the use shall be in compliance with the applicable laws/regulations.

- Before operating the machine, read carefully the safety instructions contained in this manual, on the manual of the generating set and all other manuals supplied.
- All operations, handling, installation, use, maintenance, repair should be carried out by authorized and qualified personnel.
- When operating, wear personal protective equipment (PPE): footwear, gloves, helmet, etc..
- The owner is responsible for maintaining the equipment in safe conditions.

Use only in perfect technical conditions

The machinery or equipment must be used in perfect technical condition. Remove immediately any defects that may affect the safe conditions of use.

- Before starting to use this equipment it is important to take knowledge of all the controls of the machine, all its functions and its correct installation in order to avoid accidents to people and damage to the machine itself. In particular, it is important to know how to stop the equipment quickly in case of emergency.
- Do not allow the use of the machine to people unless previously instructed with all the information for a proper, safe use.
- Forbid the access in the operational area to non authorized personnel, children and pets so as to protect them from possible injury caused by any part of the machine.

SAFETY PRECAUTIONS DURING HANDLING AND TRANSPORTATION

- Lift the machine using only the points allocated for this function.
  The lifting eye (or eyes) and the correct positioning of the forks of the forklift are marked with specific adhesives.
- Before moving a lighting tower lower the telescopic mast and block properly all movable parts such as the access doors, the mast, the outriggers, the floodlights.
- Clear the operational area of possible obstacles and all unnecessary personnel.
- Always use lifting equipment properly sized and controlled by enabled bodies.
- It is forbidden to set on the frame of the equipment objects or accessories that alter weight and center of gravity and cause stresses not foreseen to the lifting points.
- Do not submit the machine and the lifting equipment to swinging or shock which may transmit dynamic stress to the structure.

Equipments with site tow

- Never drag the machine without trailer (or site tow)
- Check for a correct assembly of the machine to the towing device.
- Always make sure that the hook of the vehicle is suitable for towing of the total mass of the trailer.
- Do not tow the trailer if the coupling devices are worn or damaged.
- Check for proper tire pressure.
- Do not replace the tires with types different from the original ones.
- Check that the brakes and the optical signaling of the trailer are working properly.
- Verify that the bolts of the wheels are in place and well tightened.
- Do not park the machine (on trailer or site tow) on a steep slope.
  For the stops, not followed by a work session, always engage the parking brake and / or block the wheels by means of wheel chocks.
- Do not tow the trailer on bumpy roads.
- Do not exceed the maximum permissible speed on public roads of 80 km/h with the trailer, in any case comply with the legislation applicable in the country of use.
- Do not use the site tow on public roads, this is intended for use only in private and delimited areas. The maximum permitted speed is 40 km/h on smooth surfaces (asphalt or concrete), adapt in each case the speed to the type of ground.

SAFETY PRECAUTIONS DURING INSTALLATION AND USE

- Always locate the lighting tower on a flat and solid ground, so as to avoid tipping, slipping or falling during operation. Avoid using the lighting tower on slopes greater than 10 degrees.
- Make sure the area immediately surrounding the machine is clean and free from debris.
- Make sure the area above the lighting tower is free from overhead cables or other obstacles. The lighting tower reaches a maximum height of 9 meters.
- Before raising the mast extract the outriggers located at the sides of the machine. Acting on the outriggers level the lighting tower making use of the bubble, so as to bring the equipment in a horizontal position. Make sure that the tower rests securely on the outriggers. If the lighting tower is mounted on road trailer pull the handbrake.
- Do not operate the lighting tower if the wind speed exceeds the safe speed indicated or if it is expected the arrival of storms or thunderstorms in the area.
- Lower the telescopic mast when the tower is not used.
- Always check the good condition of the power cable before connecting the lighting tower to the generating set.
- Do not use the lighting tower with wet or damp hands and / or clothing.
- The machine must always be positioned so that the exhaust gases are dispersed in the air without being inhaled by people or living beings.
- If you use the machine indoors is necessary that the installation is designed and built by skilled technicians in a workmanlike manner.
- During normal operation, keep doors closed. The access to the internal parts should be allowed only for maintenance reasons.
- Do not place objects or obstructions in the vicinity of the air intakes and air outlets, a possible overheating of the generator could cause a fire.
- Keep area near to the muffler free from objects such as rags, paper, cardboard. The high temperature of the muffler could cause the burning of objects and cause fire.
- Do not touch and do not place objects on the lamps during operation or immediately after use. The lamps become very hot.
- Do not turn on the lamps without the protective glass or with the same broken or damaged.
- Immediately stop the machine in case of malfunction.
  Do not restart the machine without first having found and fixed the problem.

SAFETY PRECAUTIONS DURING MAINTENANCE

- Make use of **qualified** personnel to carry out maintenance and troubleshooting.
- Always use protective devices and suitable equipment.
- Turn off the generating set or unplug the power cable before carrying out any type of maintenance on the lighting tower.
- Always cut off power to the lamps and wait for their cooling before performing any maintenance or replacement.
- Do not remove the protections and the safety devices unless absolutely necessary, restore them after completion of the maintenance or repair
- Before carrying out any type of maintenance or repairs on the generating set refer to the manual of the generating set and the other manuals supplied.

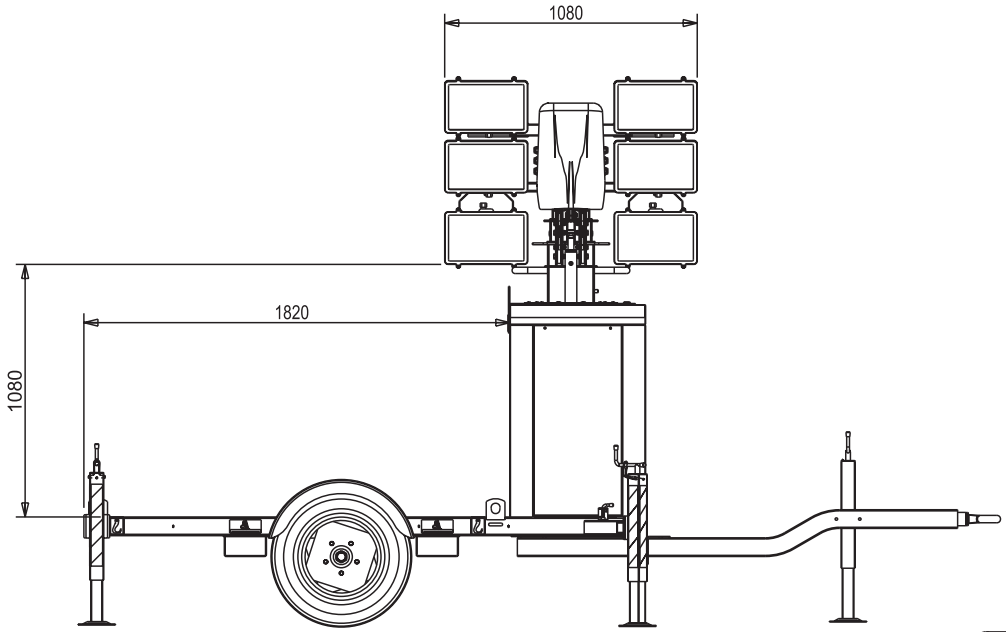

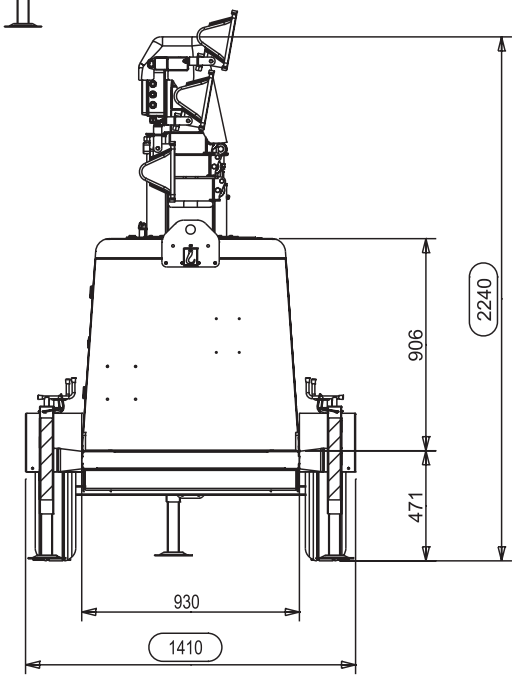

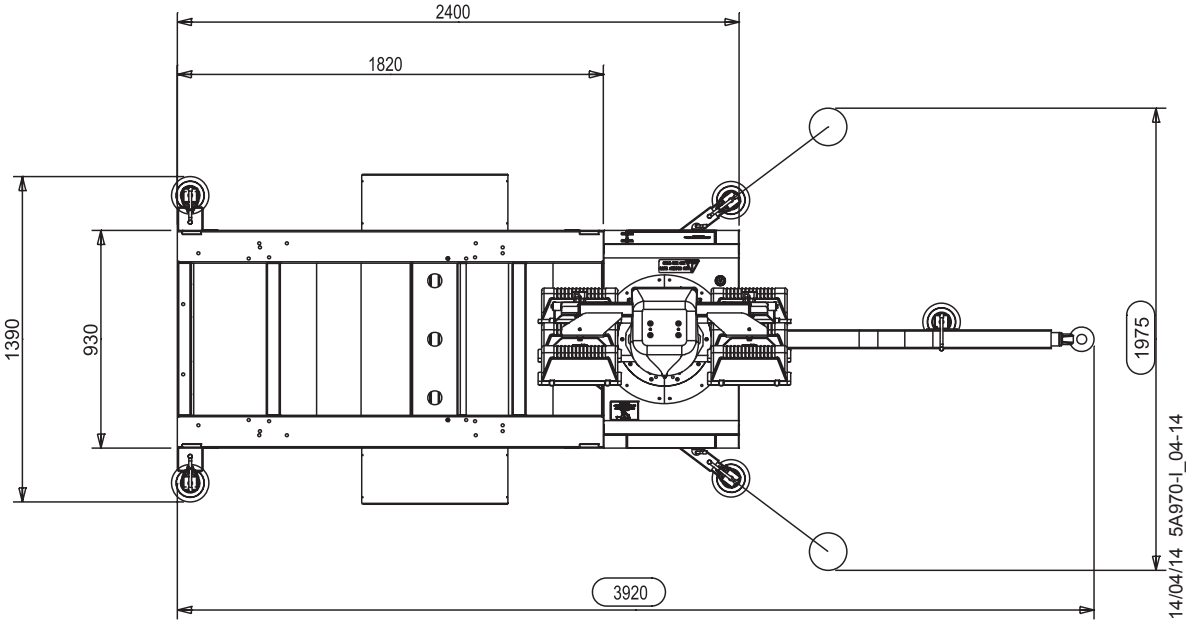

14/04/14 5A970-I_04-14

General precaution when handling the machine

ATTENTION

During handling of the lighting tower is essential to pay close attention.
All handling operations must be performed by qualified personnel.
For the characteristics of weight and size, an error during the handling of the machine may result in serious damage to the surrounding people and to the machine itself.

In order to minimize the dangers involved in moving the equipment it is important to follow carefully the requirements below:

- The transport must always be done with the engine off, with electrical cables and starting battery disconnected, fuel tank empty.
- Clear the moving zone of all possible obstacles and from all unnecessary personnel.
- Use properly sized lifting equipment regularly submitted to major overhaul by an authorized organisation. **It is prohibited to fasten objects or accessories on the lighting tower** baseframe that may modify weight and center of gravity and may cause movements unforeseen by the lifting eyes.
- Do not subject the **lighting tower** and lifting equipment to abrupt or undulating movements that pass on stress dynamics to the structure.
- Do not lift the equipment at heights greater than those strictly necessary.
- To access the attachment points on the roof of the machine, use approved ladders only. Climb the ladder being supported by a second operator and wear special non-slip shoes.

Moving the generating set via forklift

When lifting with a forklift it is necessary to:
- insert the forks of the forklift into the specific pockets located sideways on the baseframe, as indicated in the figures.
- Fully insert the forks so that they stick out from the opposite side and be careful to keep the equipment in horizontal position.

Stickers on the base indicate where to place the lifter forks.

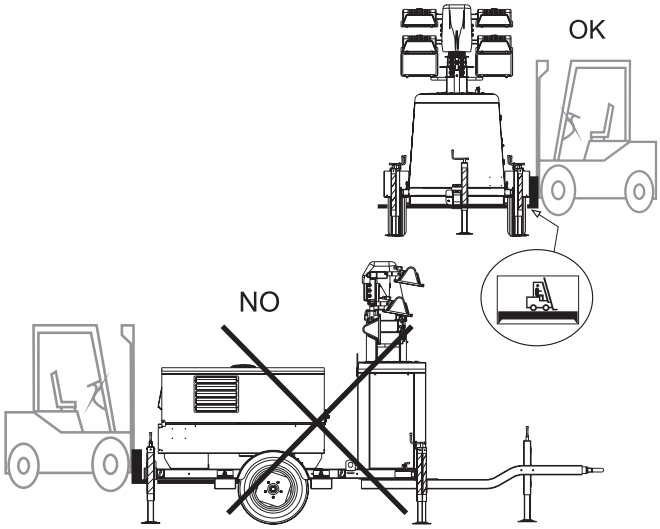

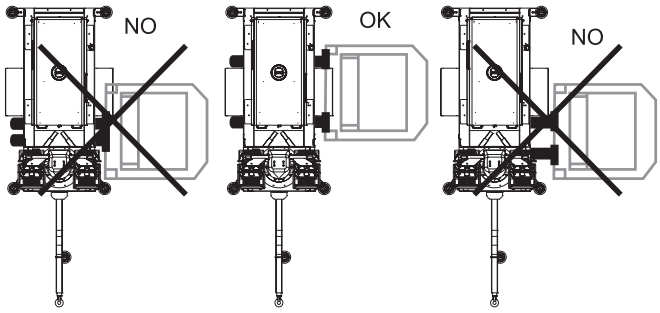

Moving the generating set via cables or chains

When lifting the genset with the aid of cables or chains it is necessary to use equipment periodically checked by a licensed organisation. Hook the cables only on to the points provided for this use and shown via the appropriate stickers.

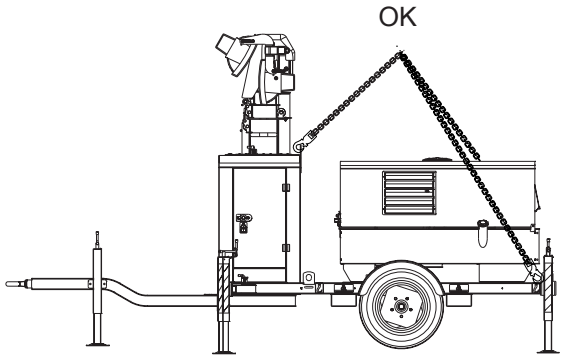

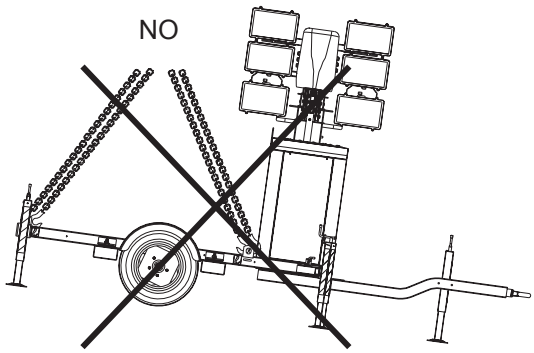

Moving by site trolley / trailer

CAUTION

the trailer can be driven only after you have done the following:
- **complete lowering of the mast**
- **engine shutdown**
- **positioning of the floodligths for the transportation.**

Before starting to tow do the following:
- Fully raise the outriggers and the parking stand of the trolley and lock the crank with its clamp
- Fully retract the outriggers up to snap the locking pins
- Make sure that all the doors are locked
- Check for proper tire inflation of the trailer

Site tow CTL:

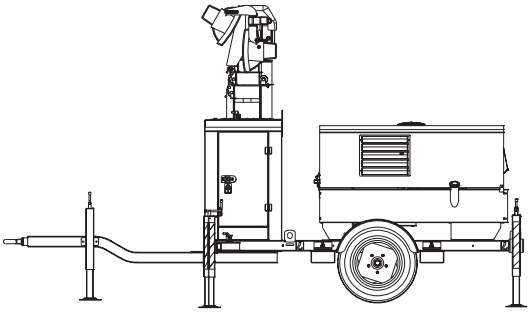

this trailer is made by the manufacturer, it can not be towed on public roads. Therefore it can only be used on private roads and no through traffic zones.
The maximum speed allowed is 40 km/h on smooth surfaces (asphalt, cement) and, in any case, the laws in force in the place of use should be respected.
Always follow the directions below for any tipe of tow:

- Do not park the machine (on trailer or site tow) on a slant ground.
- When parking always use the emergency/hand brake and/or safety clamps.
- DO NOT tow the trailer on bumpy roads.

Machine transportation by a motor vehicle

During the transportation with a motor vehicle it is important to use appropriate belts/straps to stabilise the unit, thus avoiding that unexpected jumps or jolts can cause damage to the baseframe and to the engine or even worse the loss or the overturning of the load. It is the carriers responsibility to always respect the Highway Code in force.

ATTENTION

Before operating the lighting tower make sure that all safety regulations concerning installation and use are satisfied.
In particular, be sure that:

- the surface on which the lighting tower is placed is flat and free of obstacles
- the wind speed does not exceed the safe speed indicated
- there are no obstacles or overhead power lines above the lighting tower
- the status of the lighting tower is adequate, in general
- the lifting ropes of the mast are in perfect condition.

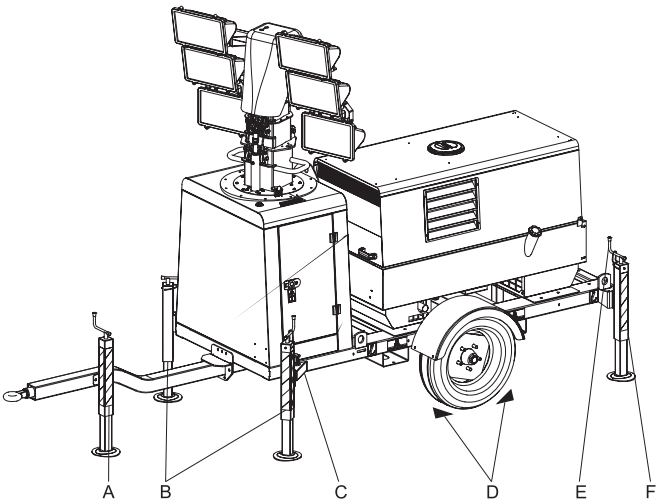

A. Jack
B. Front outrigger
C. Outriggers extension arm
D. Wheel chocks
E. Leveling handle
F. Rear outrigger

POSITIONING OF THE OUTRIGGERS AND LEVELLING OF THE TOWER

- Block the wheels of the site-tow using the chocks.
- Raise the locking pins of the extension arms of the front outriggers and extract them until the pins block again the arms in their extended position.
- Lower the outriggers and adjust the lighting tower position by acting on their handles, looking at the bubble level on the machine, until the horizontal position is reached.
- Lower the jack of the drawbar until it is resting on the ground.

SAFETY LOCK

ATTENTION

Check the safety lock on the telescopic mast. The safety lock may be removed to facilitate shipping operations.
Before operating the lighting tower put the safety lock in its position as shown in the figure.

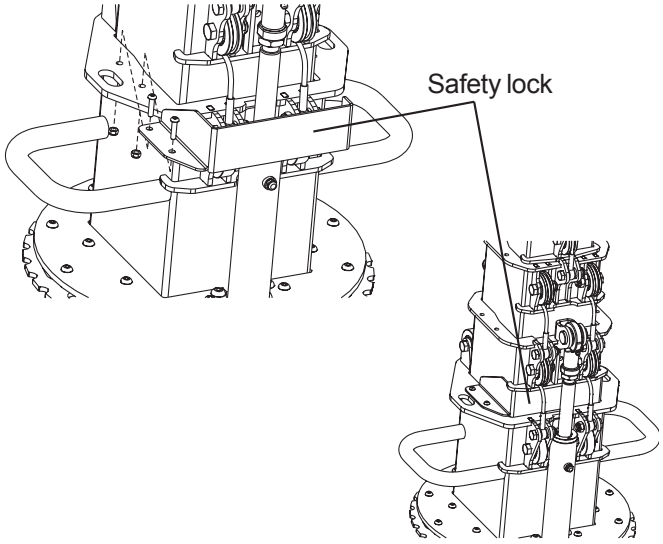

The safety lock stops the lowering of the mast at a safe height. This avoids the risk of operator injuries in the event of sudden failure of the telescopic mast ropes or the hydraulic lifting system.

ELECTRICAL CONNECTION

Grounding

Follow the instructions on the manual of the generating set.
The grounding is not necessary, even if requested by the manual of the generating set, if the following conditions are satisfied:

1) the lighting tower is the only device powered by generating set
2) the generating set is placed on the lighting tower frame
3) the two devices must be connected to a bonding connection

- Make sure that the electrical power supply system (generating set) matches the electrical characteristic of the lighting tower (power, voltage, frequency).
- Make sure the power cable is always in good condition and is placed so as to it can not be damaged.

ORIENTATION OF FLOODLIGHTS AND MAST

The floodlights beam can be oriented, according to the needs, by acting in the following two ways:

- by adjusting the inclination of each floodlight
- by rotating the mast in the desired direction.

To adjust the angle of the floodlights loosen the clamping lever or the screws (1), turn the floodlight to the desired position and lock again.

To rotate the mast lift the pin (2) and turn it in such a way as to keep it extracted. Direct the mast in the desired direction by acting on the handles (3). Unlock the pin (2) and slightly rotate the mast until the pin gets into a hole, thereby locking of the rotation of the mast.

RAISING AND LOWERING OF THE MUST

- Rotate the handle of the manual winch (1) to raise the tower. The automatic brake of the winch will stop the tower at the preferred height when the handle is released.
- Start the generating set following the instructions of the manual.
- Before powering up the lighting tower to make sure that the circuit breakers (2) on the front panel are all in the OFF position.
- Connect the power plug of the lighting tower to the generating set and turn ON the lamps by means of the circuit breakers on the control panel.
- After use, turn OFF the lamps before starting the lowering of the mast.
- Rotate the handle of the manual winch in the opposite direction to lowering the must.

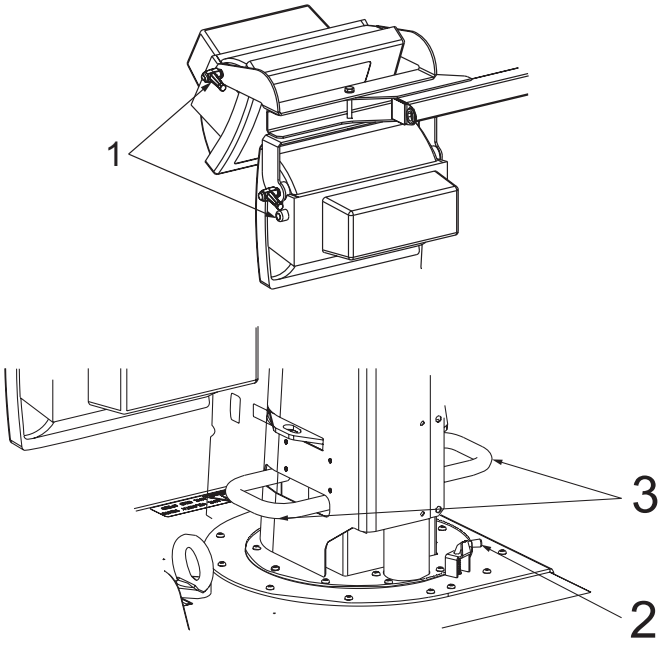

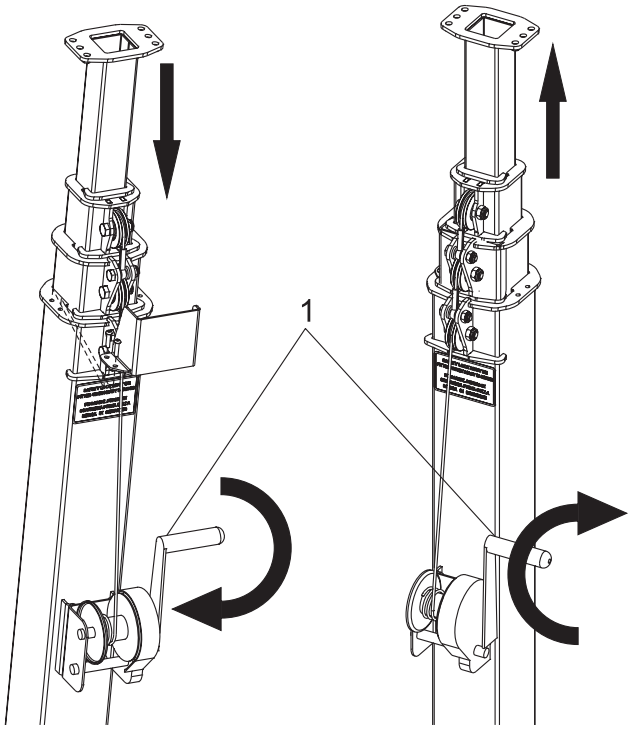

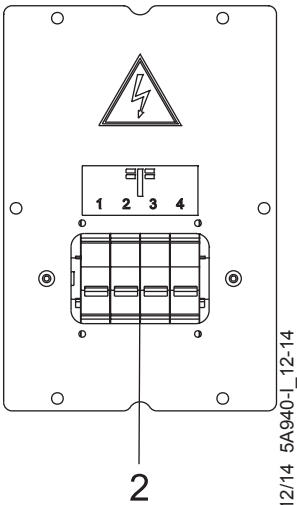

01/12/14 5A940-I_12-14

ATTENTION

Before powering the lighting tower make sure that switches of the lamps on the front panel are all in OFF position.

ATTENTION

After switch off, the metal halide lamps require a cooling time of about 15 minutes before subsequent switch on.

ATTENTION

Any maintenance or troubleshooting must be carried out in compliance with the requirements given in section: SAFETY PRECAUTIONS DURING MAINTENANCE.

NOTE

By maintenance at care of the utilizer we intend all the operatios concerning the verification of mechanical parts, electrical parts and of the fluids subject to use or consumption during the normal operation of the machine.
For what concerns the fluids we must consider as maintenance even the periodical change and or the refills eventually necessary.
Maintenance operations also include machine cleaning operations when carried out on a periodic basis outside of the normal work cycle.
The repairs **cannot be considered** among the maintenance activities, i.e. the replacement of parts subject to occasional damages and the replacement of electric and mechanic components consumed in normal use.
The replacement of tires (for machines equipped with trolleys) must be considered as repair since it is not delivered as standard equipment any lifting system.
The periodic maintenance should be performed according to the schedule shown in the engine manual.
An optional hour counter (M) is available to simplify the determination of the working hours.

MANUAL WINCH

the manual winch requires regular maintenance in particular the parts that need to be lubricated.
Refer to the manual of use and maintenance of the winch supplied with the lighting tower

WIRE ROPES

Periodically check that the steel ropes of the mast are in perfect conditions. If there is evidence of wear, abrasion, broken wires or loose connection do not use the lighting tower and plan immediately the cables replacement .
CAUTION: When replacing use ropes of the same type of the originals. For this purpose, it is highly advisable to use original spare parts**.**

PULLEYS

Periodically check the regular rotation of the pulleys and the correct position of the ropes on the pulleys. Periodically lubricate with lithium multifunctional grease.

TELESCOPIC MAST

Check the regular movement of the mast during the raise and the lowering. Periodically grease the mast with anti-corrosion waterproof spray lubricant.

LAMPS

In case of need of replacement, do not directly touch the lamps with your fingers, use a cloth or use cotton gloves. Pay attention to the high temperature that the lamps reach during operation: wait them to cool down before replacing.

TIRES

On the trailer/site-tow versions periodically verify the proper tire pressure (2.2 bar).

GENERATING SET

Refer to the manual of the generating set and the other manuals supplied.

IMPORTANT

In the maintenance operations avoid that polluting substances, liquids, exhausted oils, etc. bring damage to people or things or can cause negative effects to surroindings, health or safety respecting completely the laws and/or dispositions in force in the place.

STORAGE

In case the machine should not be used for more than 30 days, make sure that the room in which it is stored presents a suitable shelter from heat sources, weather changes or anything which can cause rust, corrosion or damages to the machine.

Protect the machine with a plastic hood.

CUST OFF

☞ Have **qualified** personnel disassemble the machine and dispose of the parts, including the oil, fuel, etc., in a correct manner when it is to be taken out of service.

As cust off we intend all operations to be made, at utilizer's care, at the end of the use of the machine.
This comprises the dismantling of the machine, the subdivision of the several components for a further reutilization or for getting rid of them, the eventual packing and transportation of the eliminated parts up to their delivery to the store, or to the bureau encharged to the cust off or to the storage office, etc.

The several operations concerning the cust off, involve the manipulation of fluids potentially dangerous such as: lubricating oil and battery electrolyte.

The dismantling of metallic parts liable to cause injuries or wounds, must be made wearing heavy gloves and using suitable tools.

The getting rid of the various components of the machine must be made accordingly to rules in force of law a/o local rules.
Particular attention must be paid when getting rid of:
lubricating oils, battery electrolyte, and inflamable liquids such as fuel, cooling liquid.

The machine user is responsible for the observance of the norms concerning the environment conditions with regard to the elimination of the machine being cust off and of all its components.

In case the machine should be cust off without any previous disassembly it is however compulsory to remove:
- tank fuel
- engine lubricating oil
- cooling liquid from the engine
- battery

IMPORTANT

In the cust-off operations avoid that polluting substances, liquids, exhausted oils, etc. bring damage to people or things or can cause negative effects to surroindings, health or safety respecting completely the laws and/or dispositions in force in the place.

(I) (GB) (F) ELECTRICAL SYSTEM LEGENDE

A : Alternator
B : Wire connection unit
C : Capacitor
D : G.F.I.
E : Welding PCB transformer
F : Fuse
G : 400V 3-phase socket
H : 230V 1phase socket
I : 110V 1-phase socket
L : Socket warning light
M : Hour-counter
N : Voltmeter
P : Welding arc regulator
Q : 230V 3-phase socket
R : Welding control PCB
S : Welding current ammeter
T : Welding current regulator
U : Current transformer
V : Welding voltage voltmeter
Z : Welding sockets
X : Shunt
W : D.C. inductor
Y : Welding diode bridge
A1 : Arc striking resistor
B1 : Arc striking circuit
C1 : 110V D.C./48V D.C. diode bridge
D1 : E.P.1 engine protection
E1 : Engine stop solenoid
F1 : Acceleration solenoid
G1 : Fuel level transmitter
H1 : Oil or water thermostat
I1 : 48V D.C. socket
L1 : Oil pressure switch
M1 : Fuel warning light
N1 : Battery charge warning light
O1 : Oil pressure warning light
P1 : Fuse
Q1 : Starter key
R1 : Starter motor
S1 : Battery
T1 : Battery charge alternator
U1 : Battery charge voltage regulator
V1 : Solenoid valve control PCBT
Z1 : Solenoid valve
W1 : Remote control switch
X1 : Remote control and/or wire feeder socket
Y1 : Remote control plug
A2 : Remote control welding regulator
B2 : E.P.2 engine protection
C2 : Fuel level gauge
D2 : Ammeter
E2 : Frequency meter
F2 : Battery charge trasformer
G2 : Battery charge PCB
H2 : Voltage selector switch
I2 : 48V a.c. socket
L2 : Thermal relay
M2 : Contactor
N2 : G.F.I. and circuit breaker
O2 : 42V EEC socket
P2 : G.F.I. resistor
Q2 : T.E.P. engine protection
R2 : Solenoid control PCBT
S2 : Oil level transmitter
T2 : Engine stop push-button T.C.1
U2 : Engine start push-buttonT.C.1
V2 : 24V c.a. socket
Z2 : Thermal magnetic circuit breaker
W2 : S.C.R. protection unit
X2 : Remote control socket
Y2 : Remote control plug
A3 : Insulation moitoring
B3 : E.A.S. connector
C3 : E.A.S. PCB
D3 : Booster socket
E3 : Open circuit voltage switch
F3 : Stop push-button
G3 : Ignition coil
H3 : Spark plug
I3 : Range switch
L3 : Oil shut-down button
M3 : Battery charge diode
N3 : Relay
O3 : Resistor
P3 : Sparkler reactor
Q3 : Output power unit
R3 : Electric siren
S3 : E.P.4 engine protection
T3 : Engine control PCB
U3 : R.P.M. electronic regulator
V3 : PTO HI control PCB
Z3 : PTO HI 20 l/min push-button
W3 : PTO HI 30 l/min push-button
X3 : PTO HI reset push-button
Y3 : PTO HI 20 l/min indicator
A4 : PTO HI 30 l/min indicator
B4 : PTO HI reset indicator
C4 : PTO HI 20 l/min solenoid valve
D4 : PTO HI 30 l/ min solenoid valve
E4 : Hydraulic oil pressure switch
F4 : Hycraulic oil level gauge
G4 : Preheating glow plugs
H4 : Preheating gearbox
I4 : Preheating indicator
L4 : R.C. filter
M4 : Heater with thermostat
N4 : Choke solenoid
O4 : Step relay
P4 : Circuit breaker
Q4 : Battery charge sockets
R4 : Sensor, cooling liquid temperature
S4 : Sensor, air filter clogging
T4 : Warning light, air filter clogging
U4 : Polarity inverter remote control
V4 : Polarity inverter switch
Z4 : Transformer 230/48V
W4 : Diode bridge, polarity change
X4 : Base current diode bridge
Y4 : PCB control unit, polarity inverter
A5 : Base current switch
B5 : Auxiliary push-button ON/OFF
C5 : Accelerator electronic control
D5 : Actuator
E5 : Pick-up
F5 : Warning light, high temperature
G5 : Commutator auxiliary power
H5 : 24V diode bridge
I5 : Y/▲ commutator
L5 : Emergency stop button
M5 : Engine protection EP5
N5 : Pre-heat push-button
O5 : Accelerator solenoid PCB
P5 : Oil pressure switch
Q5 : Water temperature switch
R5 : Water heater
S5 : Engine connector 24 poles
T5 : Electronic GFI relais
U5 : Release coil, circuit breaker
V5 : Oil pressure indicator
Z5 : Water temperature indicator
W5 : Battery voltmeter
X5 : Contactor, polarity change
Y5 : Commutator/switch, series/parallel
A6 : Commutator/switch
B6 : Key switch, on/off
C6 : QEA control unit
D6 : Connector, PAC
E6 : Frequency rpm regulator
F6 : Arc-Force selector
G6 : Device starting motor
H6 : Fuel electro pump 12V c.c.
I6 : Start Local/Remote selector
L6 : Choke button
M6 : Switch CC/CV
N6 : Connector – wire feeder
O6 : 420V/110V 3-phase transformer
P6 : Switch IDLE/RUN
Q6 : Hz/V/A analogic instrument
R6 : EMC filter
S6 : Wire feeder supply switch
T6 : Wire feeder socket
U6 : DSP chopper PCB
V6 : Power chopper supply PCB
Z6 : Switch and leds PCB
W6 : Hall sensor
X6 : Water heather indicator
Y6 : Battery charge indicator
A7 : Transfer pump selector AUT-0-MAN
B7 : Fuel transfer pump
C7 : "GECO" generating set test
D7 : Flooting with level switches
E7 : Voltmeter regulator
F7 : WELD/AUX switch
G7 : Reactor, 3-phase
H7 : Switch disconnector
I7 : Solenoid stop timer
L7 : "VODIA" connector
M7 : "F" EDC4 connector
N7 : OFF-ON-DIAGN. selector
O7 : DIAGNOSTIC push-button
P7 : DIAGNOSTIC indicator
Q7 : Welding selector mode
R7 : VRD load
S7 : 230V 1-phase plug
T7 : V/Hz analogic instrument
U7 : Engine protection EP6
V7 : G.F.I. relay supply switch
Z7 : Radio remote control receiver
W7 : Radio remote control trasnsmitter
X7 : Isometer test push-button
Y7 : Remote start socket
A8 : Transfer fuel pump control
B8 : Ammeter selector switch
C8 : 400V/230V/115V commutator
D8 : 50/60 Hz switch
E8 : Cold start advance with temp. switch
F8 : START/STOP switch
G8 : Polarity inverter two way switch
H8 : Engine protection EP7
I8 : AUTOIDLE switch
L8 : AUTOIDLE PCB
M8 : A4E2 ECM engine PCB
N8 : Remote emergency stop connector
O8 : V/A digital instruments and led VRD PCB
P8 : Water in fuel
Q8 : Battery disconnect switch
R8 : Inverter
S8 : Overload led
T8 : Main IT/TN selector
U8 : NATO socket 12V
V8 : Diesel pressure switch
Z8 : Remote control PCB
W8 : Pressure turbo protection
X8 : Water in fuel sender
Y8 : EDC7-UC31 engine PCB
A9 : Low water level sender
B9 : Interface card
C9 : Limit switch
D9 : Starter timing card
E9 : Luquid pouring level float
F9 : Under voltage coil
G9 : Low water level warning light
H9 : Chopper driver PCB
I9 : Fuel filter heater
L9 : Air heater
M9 : ON/OFF switch lamp
N9 : UP/DOWN button mast
O9 : Hydraulic unit solenoid valve
P9 : Hydraulic unit engine
Q9 : Ignitor
R9 : Lamp
S9 : Power system
T9 : 48Vdc power system
U9 : LED projector
V9 : 125/250V 1phase socket
Z9 :
W9 :
X9 :
Y9 :

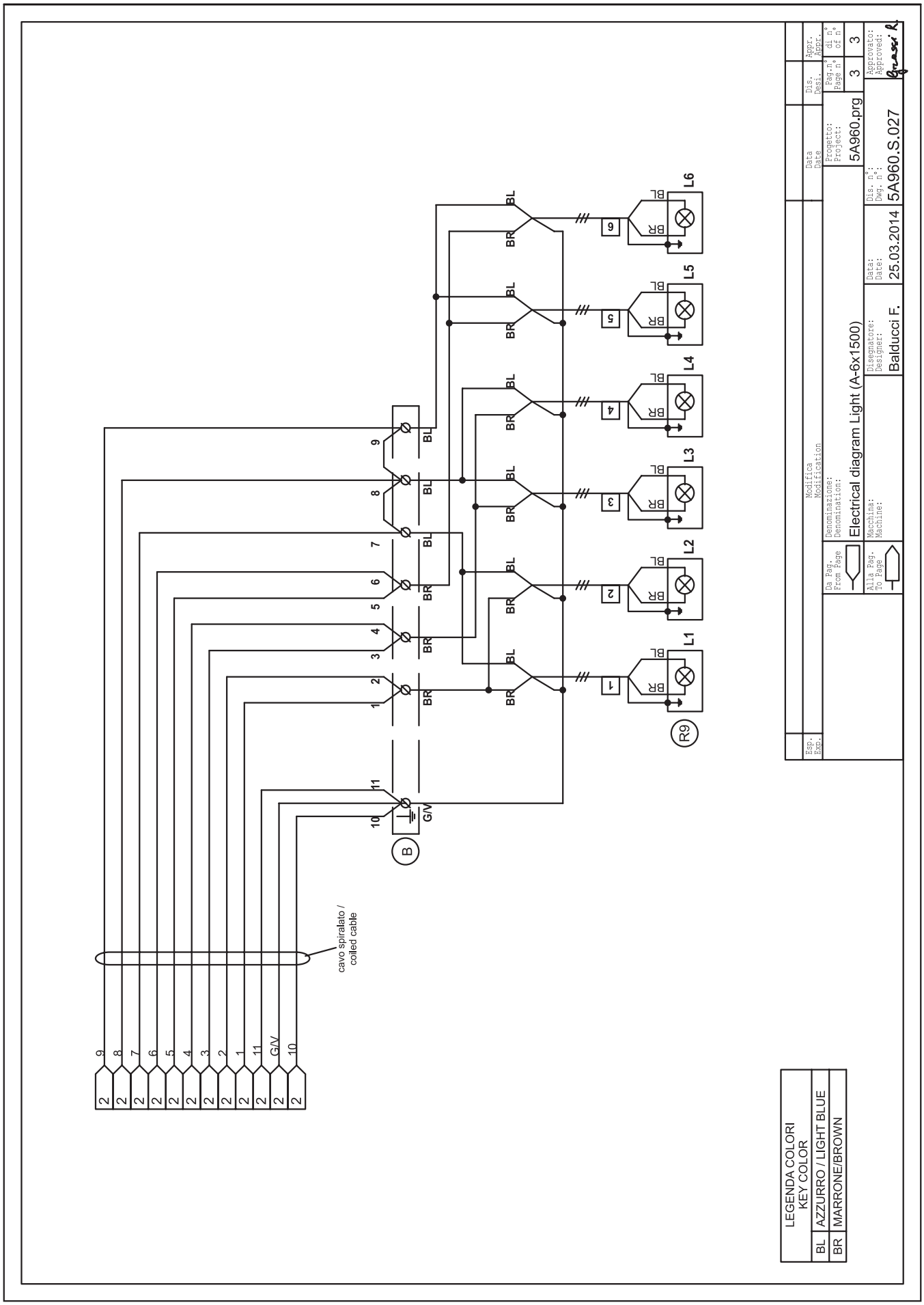
L1
L2
L3
L4
L5
L6
R9
B
BL
BR
G/V
cavo spiralato /
coiled cable
Electrical diagram Light (A-6x1500)
Balducci F.
25.03.2014
5A960.S.027
5A960.prg
LEGENDA COLORI
KEY COLOR
BL AZZURRO / LIGHT BLUE
BR MARRONE/BROWN

MOSA div. della BCS S.p.A.

Viale Europa, 59 20090 Cusago (Milano) Italy

Tel.+39 - 0290352.1 Fax +39 - 0290390466 www.mosa.it